Dendro Lift

DSS2 Premium

For Lifting Stackers, Pallet Trucks & Transporters

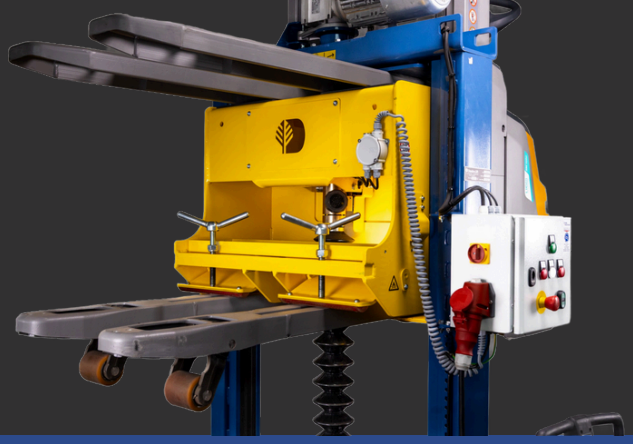

Servicing a stacker or pallet truck no longer requires a low, uncomfortable working position or an unstable scissor lift. DSS2 Premium provides a simple, fast and secure solution

KEY FEATURES

QUICK & EASY TO LIFT A STACKER

Tailored for safe, quick, and easy lifting of stackers — facilitating access to the motor, batteries, brakes, and wheel suspension. Developed in collaboration with leading forklift manufacturers.

FAST AND FLEXIBLE

Insert the stacker's support legs and tighten the fastening screws to raise the unit to working height in around a minute. Compatible with most forklifts up to 2,500 kg. Supports both long forks and shorter EUR-6 forks (800 × 600 mm).

ERGONOMIC WORKING POSTURE

All sides free for full access to all parts of the forklift. Equipped with a convenient shelf for tools and spare parts. Maximum lifting height 1,800 mm.

LONG SERVICE LIFE

Uses a self-locking, non-reversing trapezoidal lifting spindle. Dendro Lift has produced robust heavy-duty mobile lifting jacks since the 1970s.

SAFETY & RELIABILITY

- Self-locking, non-reversing trapezoidal lifting spindle with safety follower nut
- Enclosed gearbox with brake motor — prevents unintentional lowering of load
- Easily accessible emergency stop
- Safety limit switch functions for nut wear and obstacle control

CE

Certified in accordance with SS-EN 1493:2022 standard for vehicle lifters. The self-locking spindle allows immediate work on the raised truck. No further safety precautions required.

AREAS OF USE

- FORKLIFT WORKSHOPS
- LOGISTICS CENTRES
- WAREHOUSES
- INDUSTRIES







Dendro Lift AB · Box 3055, 750 03 Uppsala, Sweden · +46 (0) 264 573 450 · info@dendrolift.com · www.dendrolift.com

DSS2 PREMIUM - TECHNICAL DATA

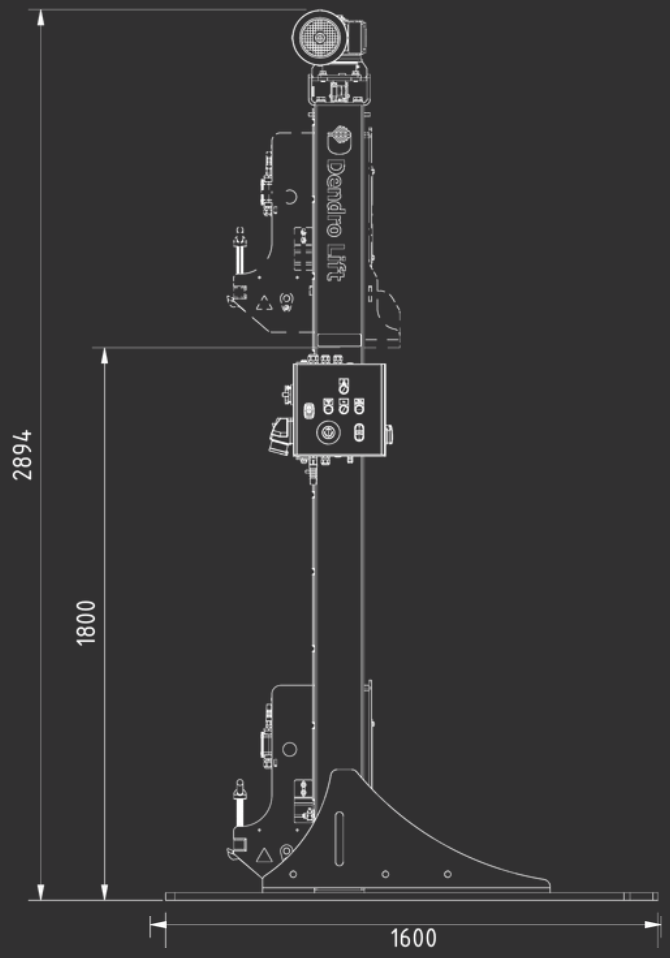

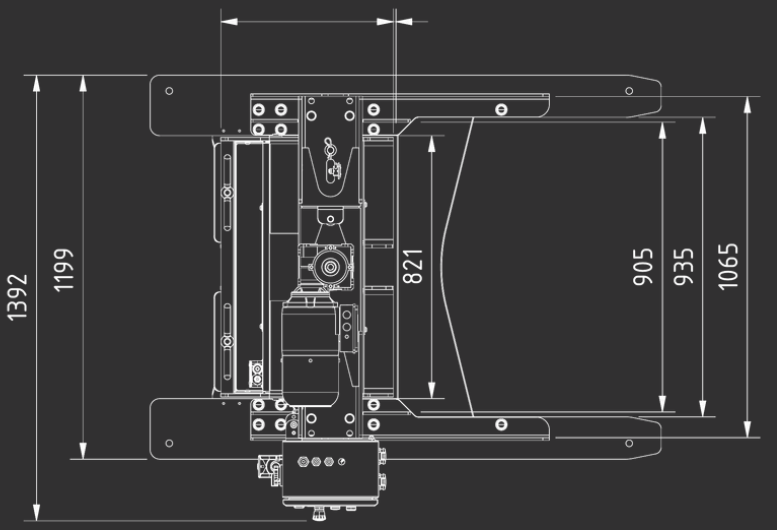

TECHNICAL SPECIFICATIONS

Lifting capacity	2 500 kg
Max lifting height (L)	1 800 mm
Total height (H)	2 894 mm
Dimension	1 221 x 1 600 mm
Weight	650 kg
Raise/lower speed	1.8 m/min
Effect	2,6 kW, 3 x 400 V
Drive	Worm gear with break motor
Lifting screw	Trapezoidal threaded spindle with safety nut protected by a rubber bellow
Safety	Self-locking, break motor & emergency break

EASY INSTALLATION

Stands freely on the floor — no floor anchoring required. Equipped with a phase changer. Easy to relocate with a counterbalance forklift, or the option Mover 2.0.

DSS2 PREMIUM HIGHLIGHTS

High-speed motor · Dual power outlets · Fork protection guards · Enhanced lifting carriage for short and long-forked trucks.
Upgrade options available via Dendro Lift accessories.

COMPLEMENTARY PRODUCTS

- **CBL6** - One pillar lift for counterbalance trucks up to 6 000 kg
- **Mobile Service Station** - DSS2 on a height-adjustable trailer
- Customized lifting solutions
- Customized jack stands for heavy loads

SERVICE AND SUPPORT

Robust heavy-duty lifts with very long lifespan. Qualified service organisation and spare parts supply ensure trouble-free operation for years to come.

SWEDISH MANUFACTURING

Dendro Lift AB · Uppsala, Sweden. Producing reliable mobile lifting jacks since the 1960s.

Dendro Lift AB · Box 3055, 750 03 Uppsala, Sweden · +46 (0) 264 573 450 · info@dendrolift.com · www.dendrolift.com