Dendro BFT50 – Bogie Load Test

For static load test on any type of Bogie

Several different types of equipment shouldn't be needed to test different types of bogies. We think that one machine should be able to handle as many models as possible. Because of this, Dendro has developed one of the most flexible solutions on the market.

Easily ensure the quality of a bogie

It's both quick and simple to perform a delivery test on a bogie with Dendro Lift Bogie Load Test. With functions such as automated programs, programmable bogie profiles and visualization of data, it's intuitive and easy to ensure high quality on prior work.

Areas of use

- Train workshops
- Depos

Complementary products

- Specialized bogie lifts
- Customized jack stands for 3-50 tonnes/pcs
- Customized lift arrangements
- Wheel analyzing equipment

Customizable turnable top beam

With a turnable top beam, it is possible to test a bogie regardless of the pressure points locations relative to the track.
Thanks to an electric, variable axis distance between the pressure points it is easy to apply the pressure right regardless their position on the bogie.

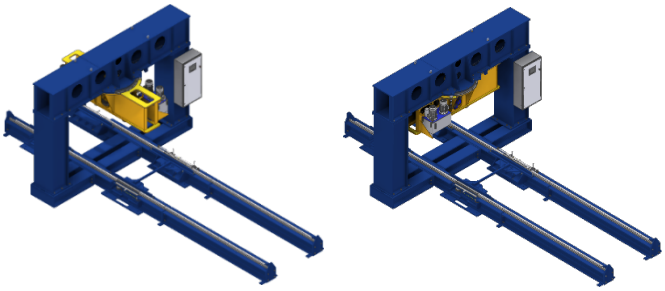

Easy to use for a more secure test

It should be easy to do right. The machine has an automatic test program, several programmable bogie profiles and easily entered specifications for different bogie models. The intuitive user interface presents the results in an easily understood manner in order to avoid mistakes. As an optional, there are finished, customized report templates which are delivered directly to a computer for further reporting and archiving.

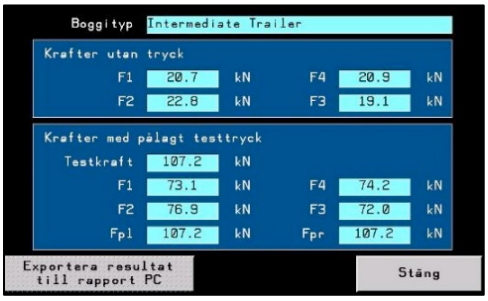

Information during a test

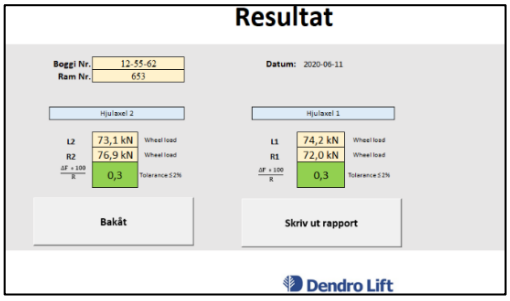

Optional: OK / not OK result after test

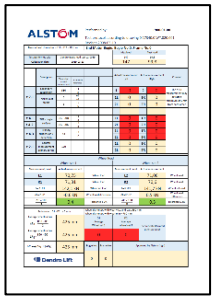

Report for archive

Dendro Lift

High measurement precision

The machine is equipped with 10 high precision load cells which ensure exact measurements. It is calibrated to ensure precision of ± 100 N / wheel (0.1 % @ 50 000 kg)

A long lifespan for many trustable tests

Dendro Lift is a Swedish company which offer high quality. Our products are made in Sweden and deliviered all over the world. Our products are always of highest class with a long lifespan.

Easy to install

The BFT50 is delivered ready to use. Regardless of wether it's an integrated solution with an already existing track or an external track is needed, we'll build a lift after the existing requirements.

Customizing

The equipement is always built after an order which ensures that pretty much all parameters can be customized to fit any existing need.

Security first

At Dendro, we live by to words – quality and safety. The machine is equipped with a locking mechanism which ensures that the bogie is still during a test. The fully automated program means that the operator can remain at a safe distance from the machine during the test. The equipement is CE certified.

Service and maintenance

Thanks to the robust construction, the lift requires only minimal maintenance. Dendro's well developed, long-term spare parts delivery ensures problem-free usage for a very long time.

Technical data

Pressure capacity	50 000 kg*1 (2 x 250 kN)
Total height	3 090 mm
Dimensions (L x W)	5 000 x 4 450 mm
Total weight	10 ton
Travel	500 mm
Pressure point distance	900 – 2100 mm
Axis distance	2 000 – 3 200 mm
Precision	±100 N per wheel

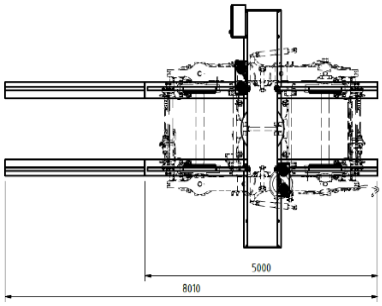

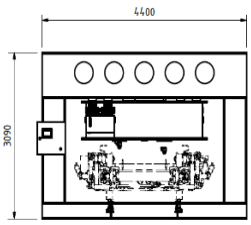

*1 Greater force possible (optional)

Dendro Lift AB
Box 3055
750 03 Uppsala
Sweden

Phone: +46 (0) 264 573 450
www.dendrolift.com
info@dendrolift.com

VAT.nr: SE556518664901
Bank: Hälsinglands Sparbank
SWIFT: SWEDSESS
SE54 8000 0812 9968 4307 9044