Depot Equipment

Gunnar Arnold, 22 May 2017

Talgo 2017

- founded in 1942, ca. 2,000 staff worldwide
- our products: HST, hotel trains, passive tilting, gauge-changing trains, maintenance
- own depot activities in Spain, USA, Germany, Kazakhstan, Uzbekistan, Saudi-Arabia, Russia

Talgo Maintenance Equipment

- Wheel Diagnosissysteme
  - EVA – Wheel Profile Check
  - DSR – Ultrasonic Check of Running Band
  - EMO – Out-of-Roundness Check
- Underfloor Wheel-Lathes (UWL)
  - Model 2112: up to 18/20 t axle load
  - Model 3112: up to 25/30 t axle load
  - Model 4112: up to 45 t axle load
- Shunting Cars
- Wheel and Axle Changers
- Manual Calipers

Talgo UWL 2112 Single

Talgo UWL 2112 Single

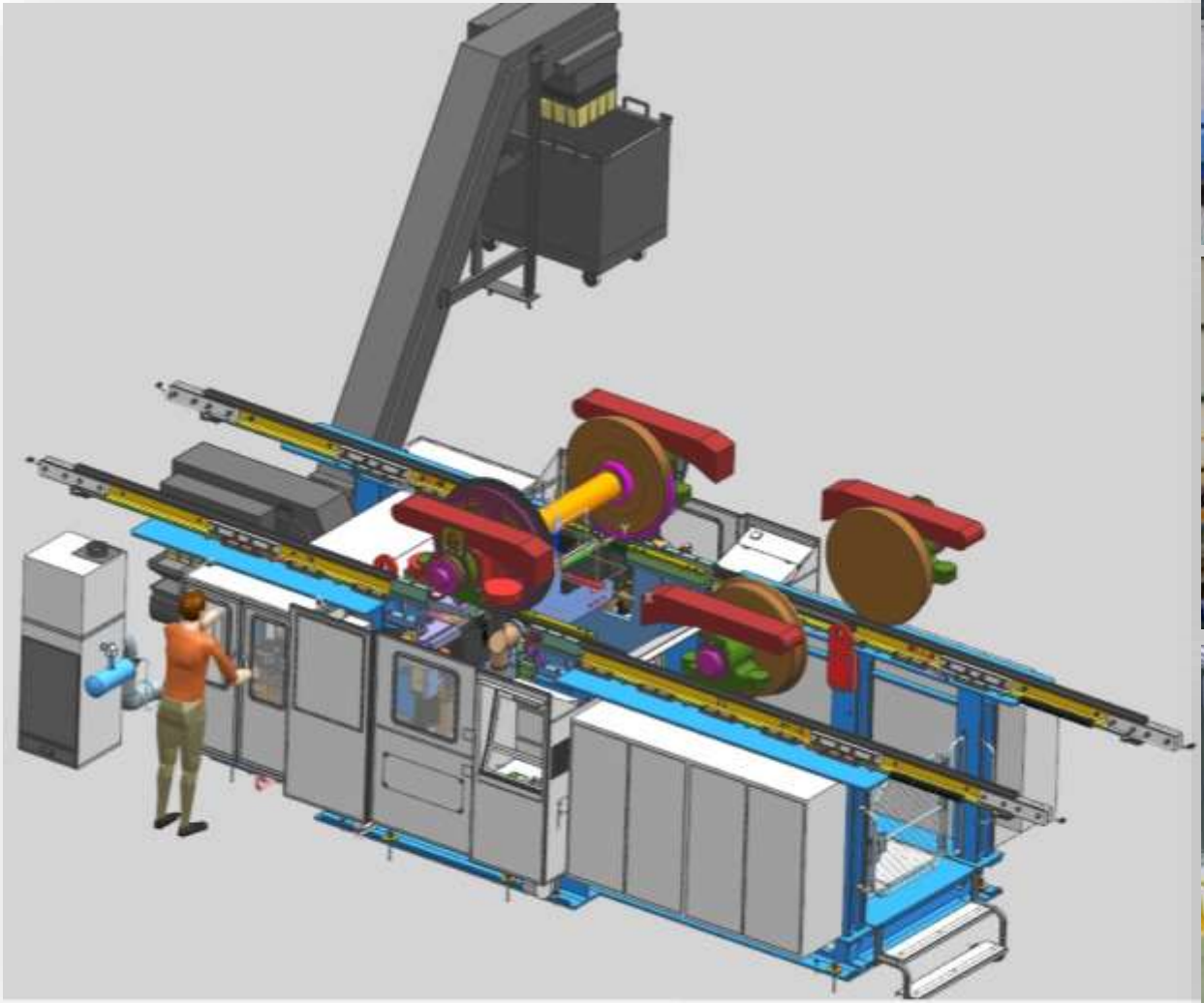

Talgo UWL 3112 Single

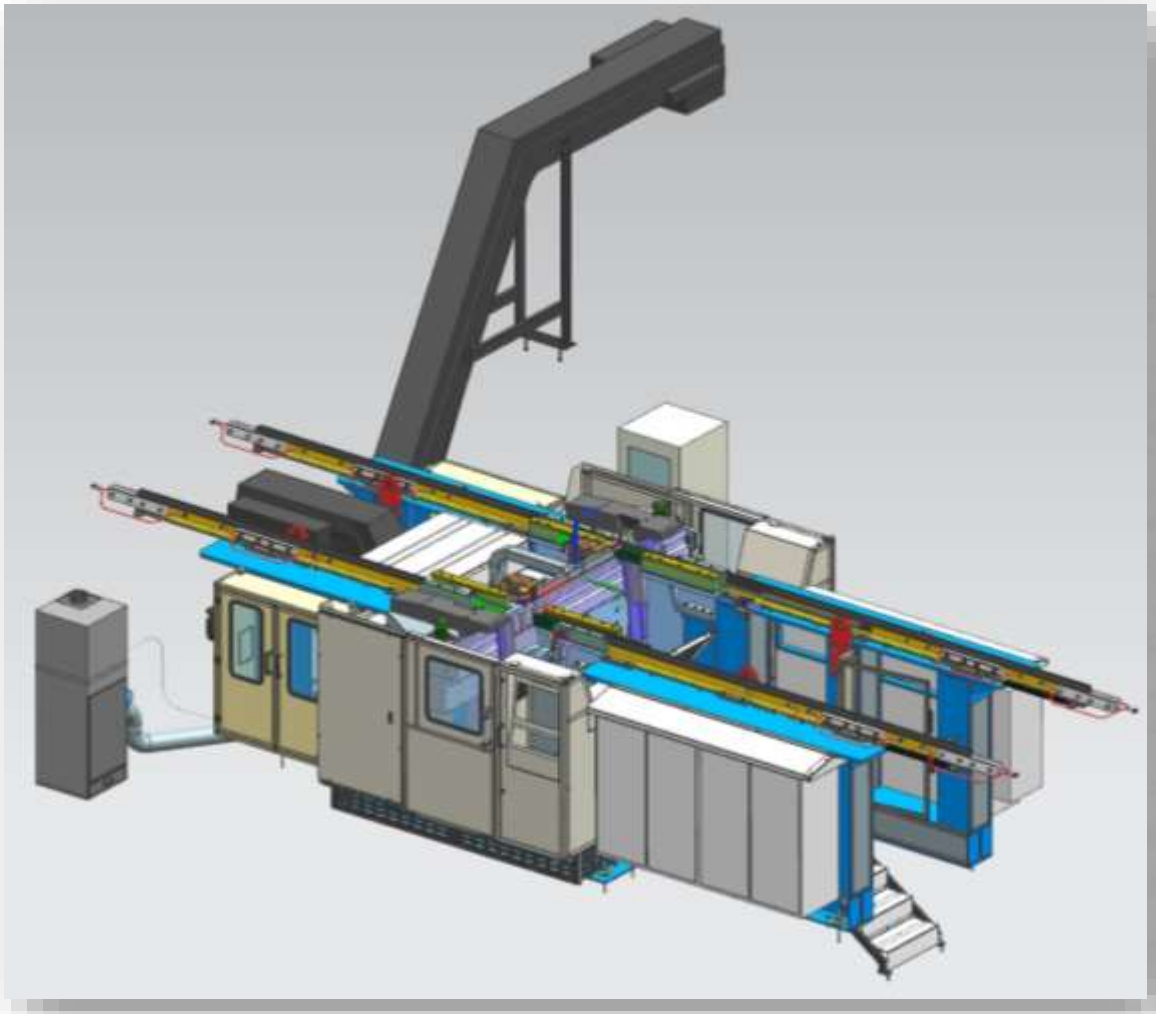

Talgo UWL 4112 Single

Talgo Tandem-UWLs

Customized Adaptations

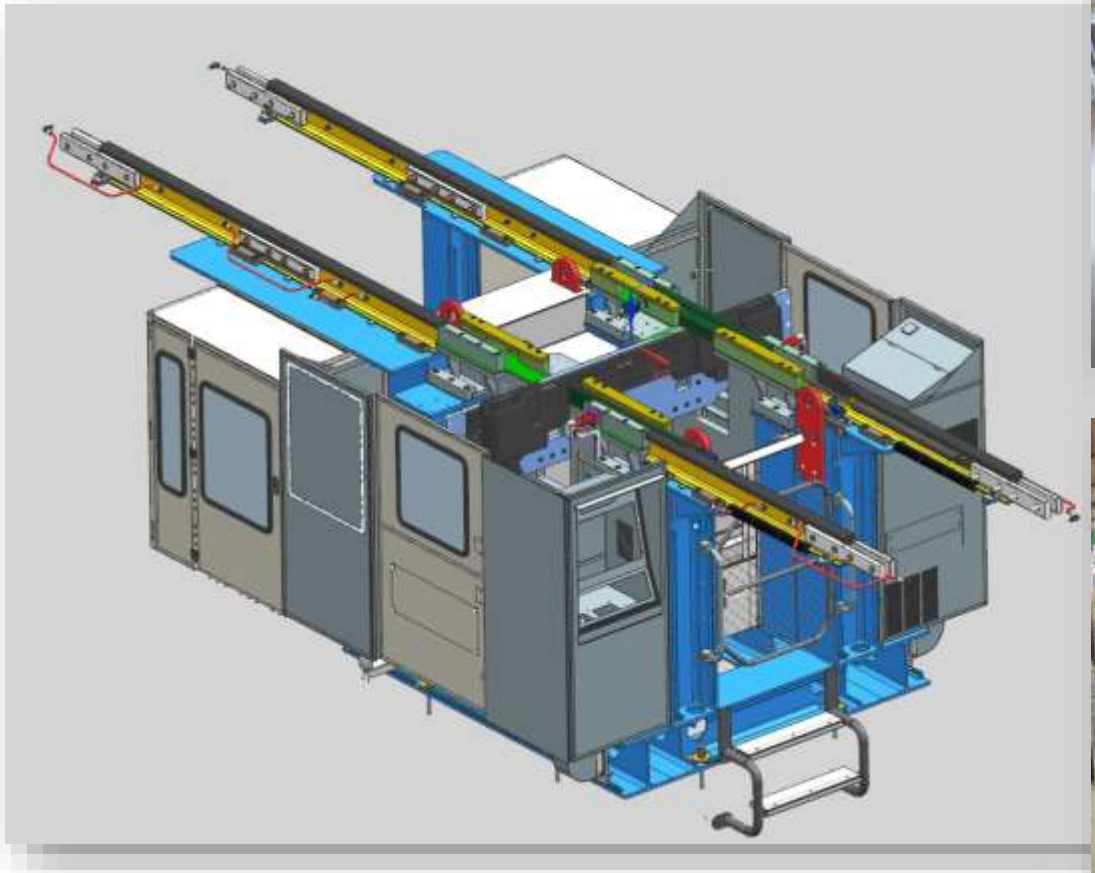

Advantages and Characteristics of a Talgo-UWL

- easily adaptable to local infrastructure
- from 760 mm to 1676 mm track gauge realised
- efficient redundancy is our principle (4 individual drive units, two redundant operational panels, divided hydraulic units, ...)
- customized hold-down and swarf transportation concepts
- economic turning concept, manually or semi-automatic
- ergonomic operation from outside the vehicle's static envelope
- amendable to a complete wheel-maintenance centre concept
- 24/7 service by maintenance experts (service hotline, telediagnosis, 24h on-site support)
- The only UWL developed by a railway maintenance company!

The Technological Circle

Wheel Monitoring Equipment:
Fully automatic check of all relevant wheel parameters

Software:
timely planning of corrective action

UWL:
creating the desired wheel geometry

The Complete Concept

Wheel Diagnosis

Central PC

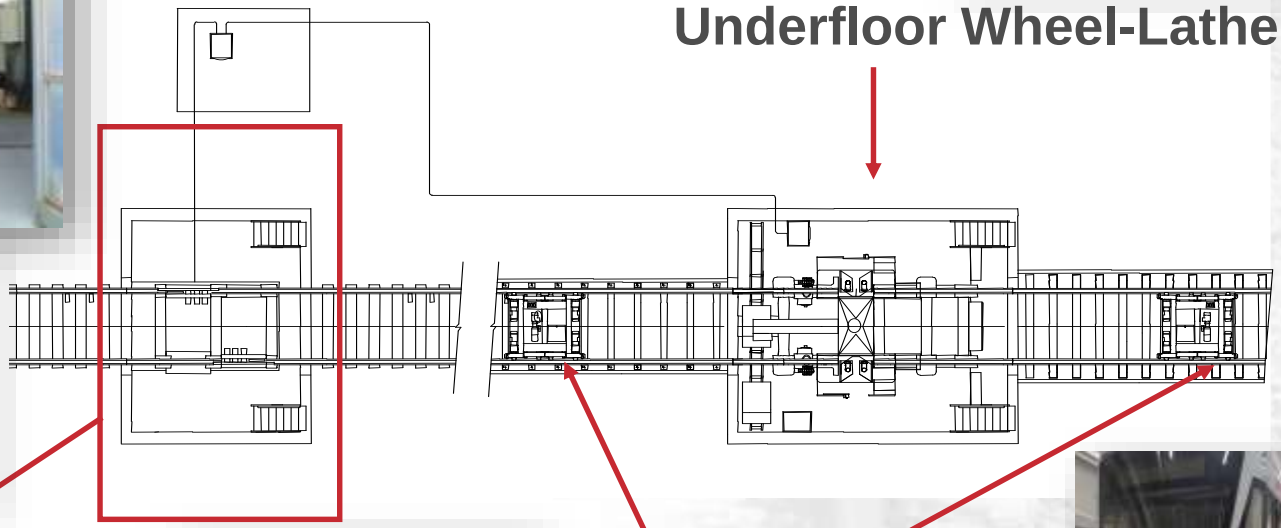

Underfloor Wheel-Lathe

Shunting Cars

Talgo UWL and Wheel Diangosis System EVA

Why Using Automatic Wheel Diagnosis?

- Quick, frequent & fully automatic measuring of wheel parameters without influences of human failures
- Automatic handling advices
- Survey on wheels' history and wear
- Support to optimize your wheel profiles
- Customized data check

➢ Less unscheduled laydown of vehicles

➢ Safer operation

➢ Prolongated wheel lifetime by optimized reprofiling

➢ Better planning of depot activities

➢ Reduction of fleet

EVA – Wheel Profile Check

- Laser-based profile analysis
- Measuring of all relevant parameters and diameters
- Fully automatic measuring between 0-15 km/h (EVA 2) / 0-50 km/h (EVA 3)
- Integrable into existing infrastructure
- Proven concept for all kinds of rail vehicles and in different surroundings

EVA – Data Evaluation

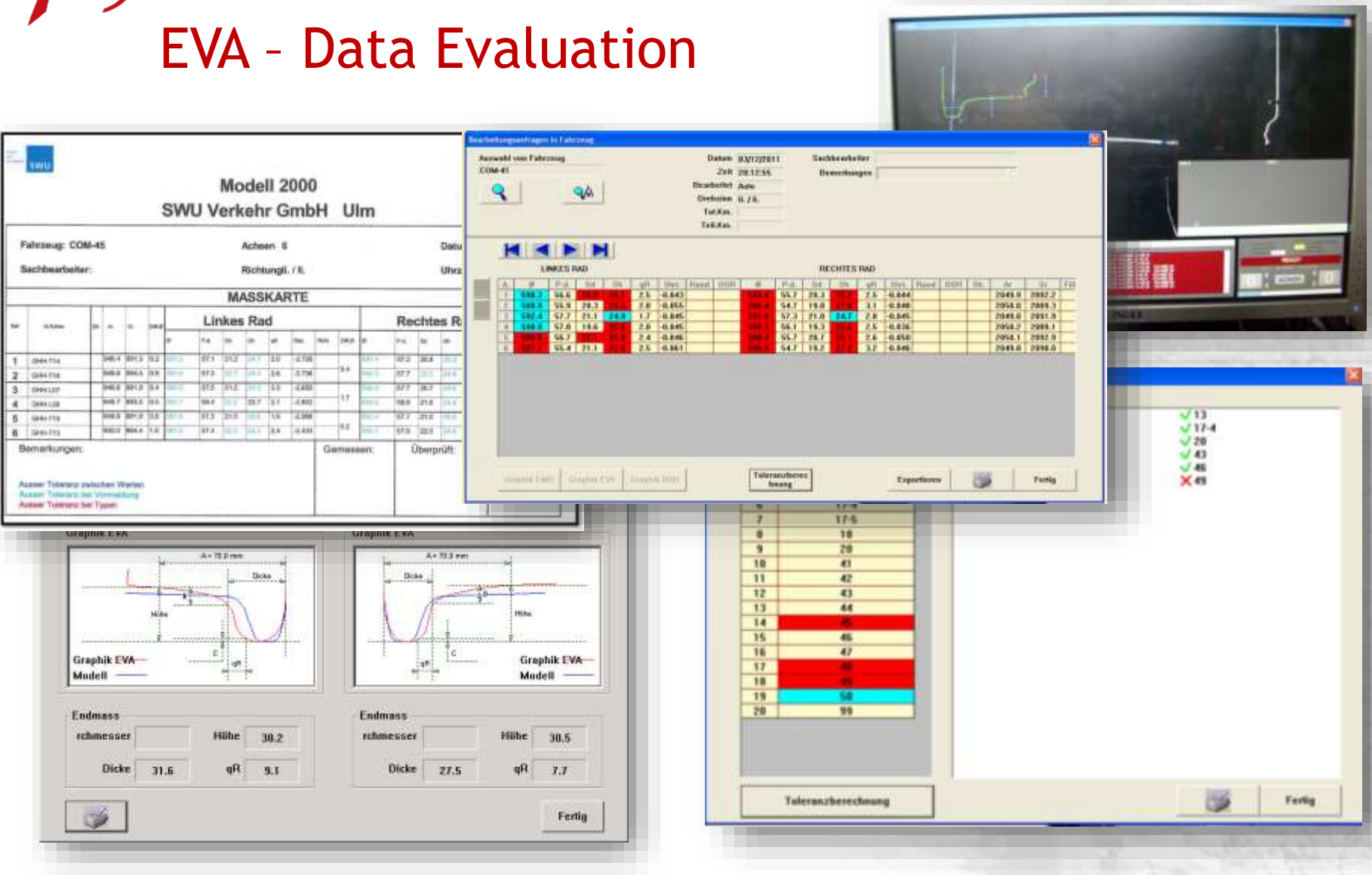

Examples of Applications

Contact & After-Sales-Service

- Next service station: Berlin
- 24/7 availability

Gunnar Arnold

☎ +49 30 2388000

arnold@talgo.de